C210007

Chisel Cartridge 2.3 x 0.7

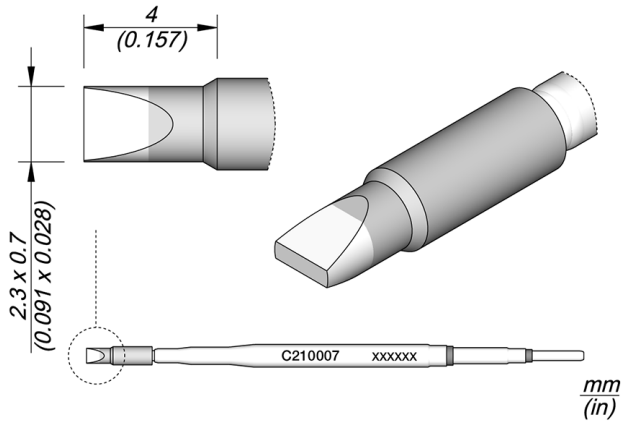

C210 cartridges are appropriate for precision soldering jobs with medium power requirements.

Due to the size, these cartridges are perfect to work with SMD, under a microscope, or with conventional components.

They work with T210 Precision Handpieces.

JBC Long Life Tips offer instant heat up, excellent heat transfer and great durability.

They last 5 times longer than other brands thanks to the JBC Most Efficient Soldering System and the Sleep & Hibernation features.

REFERENCE

C210007

SPECIFICATIONS

Net weight	0,002 kg (0.00lb)
WEIGHT AND DIMENSIONS	
Package	110 x 12 x 12 mm / 0.02 kg. 4.33 x 0.47 x 0.47 in / 0.03 lb

Copyright © 2023 JBC Soldering S.L. | Legal Notice | Privacy Policy | Terms and Conditions | Cookie policy | RSS Feed | JBC Store | Contact Us

CONNECTABLES

Compatible tools



T210-A Precision Handle



T210-PA Blue Grip Precision Handle